Zmotion®
正运动技术

做更好用的运动控制，智造美好生活
Better Motion Control, Smarter Life

Network IO Control Card

ECI0032

This manual is mainly for ECI0032, ECI0032B.

Vision Motion Controller

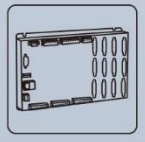
Motion Controller

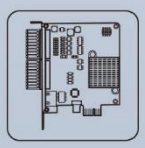
Motion Control Card

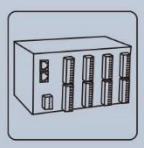
IO Expansion Module

HMI

Statement

Thank you for choosing our Zmotion products. Please be sure to read this manual carefully before use so that you can use this product correctly and safely. Zmotion is not responsible for any direct or indirect losses caused by the use of this product.

The copyright of this manual belongs to Shenzhen Zmotion Technology Co., Ltd. And reproduction, translation, and plagiarism of any content in this manual in any form is strictly prohibited without the written permission of Zmotion.

The information in this manual is for reference only. Due to design improvements and other reasons, Zmotion reserves the right of final interpretation of this information! Contents are subject to change without prior notice!

➢ Notes

In order to prevent possible harm and damage caused by incorrect use of this product, the following instructions are given on matters that must be observed.

■ Danger

Do not use it in places with water, corrosive or flammable gases, or near flammable substances.	May cause electric shock, fire, damage, etc.
When installing or disassembling, make sure the product is powered off.	
Cables should be connected securely, and exposed parts that are energized must be insulated by insulators.	
Wiring work must be performed by professionals.	

■ Notes

It should be installed within the specified environmental range.	May cause damage, mis-operation, etc.
Make sure there are no foreign objects on the product hardware circuit board.	
After installation, the product and the mounting bracket should be tight and firm.	
After installation, at least 2-3cm should be left between the product and surrounding components for ventilation and replacement.	
Never disassemble, modify, or repair it by yourself.	

Content

Chapter I Production Information.....5
1.1. Product Information.....5
1.2. Function Features.....5
1.3. System Frame.....6
1.4. Hardware Installment.....6
Chapter II Product Specification.....8
2.1. Basic Specification.....8
2.2. Nameplate & Model.....8
2.3. Interface Definition.....9
2.4. Work Environment.....10
Chapter III Wiring & Communication.....11
3.1. Power Input, CAN Communication Interface.....11
3.1.1. Power Supply Specification.....12
3.1.2. CAN Communication Specification & Wiring.....12
3.1.2. Basic Usage Method.....14
3.2. IN: Digital Input.....15
3.2.1. Digital Input Specification & Wiring.....16
3.2.2. Basic Usage Method.....17
3.3. OUT: Digital Output.....18
3.3.1. Digital Output Specification & Wiring.....18
3.3.2. Basic Usage Method.....20
3.4. RS232 Serial Port.....20
3.4.1. RS232 Interface Specification & Wiring.....21
3.4.2. Basic Usage Method.....22
3.5. ETHERNET.....22
Chapter IV Expansion Module.....25
4.1. Configure as CAN Expansion Module.....25
4.1.1. ZCAN Slave Protocol Configuration.....25
4.1.2. CAN Expansion, Wiring of Master Station.....26
4.2. CAN Bus Expansion.....27
4.2.1. CAN Expansion Wiring.....28

4.2.2. CAN Bus Expansion Resources Mapping 29
Chapter V Programming 33
5.1. Program in RTSys Software 33
5.2. Upgrade Controller Firmware 38
5.3. Program in Host-Computer by PC Languages 39
Chapter VI Operation and Maintain 42
6.1. Regular Inspection and Maintenance 42
6.2. Common Problems & Solutions 43

Chapter I Production Information

1.1. Product Information

ECI is the abbreviation of the network motion control card model launched by Zmotion Technology.

ECI0032 is a kind of network IO control card developed by Zmotion Technology. Real-time IO control can be achieved through optimized network communication protocol.

ECI0032 network IO control card supports Ethernet and RS232 communication interface to connect to computer. Every expansion module can be connected through CAN bus to expand inputs and outputs.

1.2. Function Features

- 272 isolated inputs and 272 isolated outputs can be extended through CAN bus.
- The maximum output current of general digital outputs can reach 300mA, which can directly drive some kinds of solenoid valves.
- Interfaces: RS232, CAN, Ethernet.
- Support multi-file and multi-task programming in Basic.
- A variety of program encryption methods to protect the intellectual property rights of customers.

1.3. System Frame

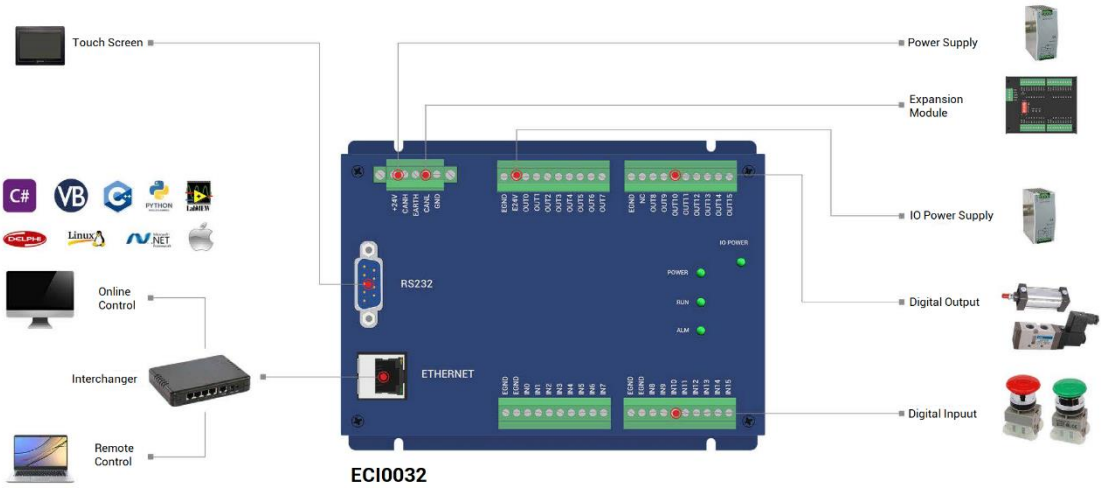

1.4. Hardware Installment

ECI0032 network IO control card adopts the horizontal installation method of screw fixing, and each controller should be installed with 4 screws for fastening.

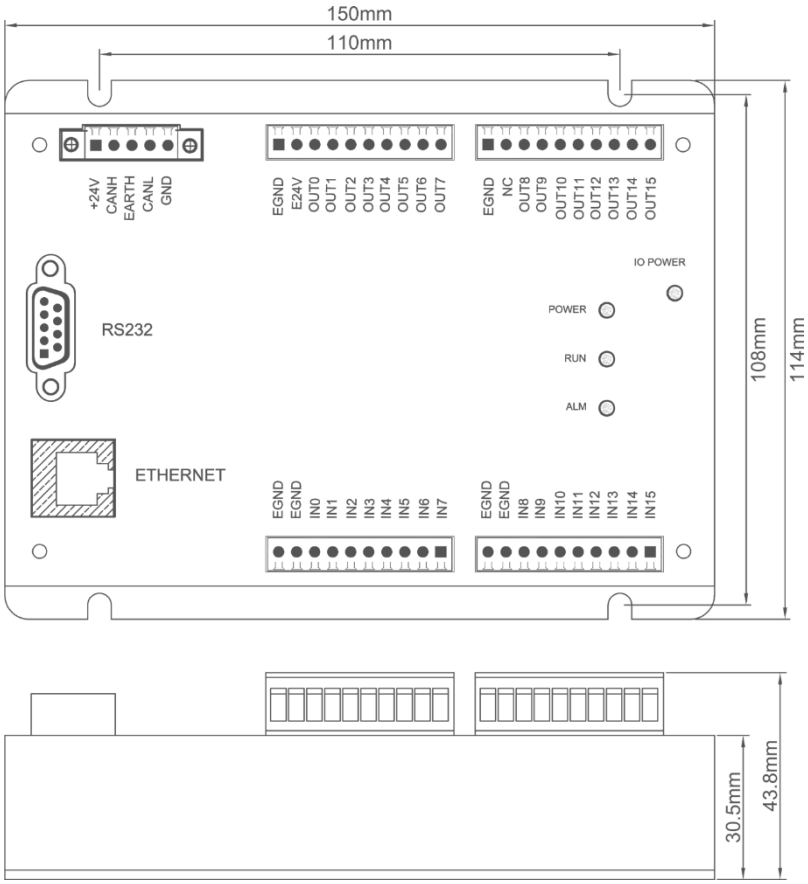

→ Unit: mm → Installment Hole Diameter: 4.5mm

Installation attention	● Non-professionals are strictly prohibited to operate. Specifically, professionals who had been trained related electrical equipment, or who master electrical knowledge. ● Please be sure to read the product instruction manual and safety precautions carefully before installation. ● Before installation, please ensure that the product is powered off. ● Do not disassemble the module, otherwise the machine may be damaged. ● Avoid direct sunlight installation. ● In order to facilitate ventilation and controller replacement, 2-3cm should be left between the upper and lower parts of the controller and the installation environment and surrounding components. ● Considering the convenient operation and maintenance of the controller, please **do not** install the controller in the following places: a) places where the surrounding ambient temperature exceeds the range of -10°C-55°C b) places where the ambient humidity exceeds the range of 10%-95% (non-condensing) c) places with corrosive gases and flammable gases d) places with many conductive powders such as dust and iron powder, oil mist, salt, and organic solvents

Chapter II Product Specification

2.1. Basic Specification

Item	Description
Model	ECI0032
Basic Axes	0
Digital IO	16 inputs, 16 outputs.
Max Extended IO	272 inputs, 272 outputs
AD/DA	/
Max Extended AD/DA	128 ADs, 64 DAs
Array Space	800
Program Space	3KByte
Flash Space	128KByte
Power Supply	24V DC input, IO power.
Communication Interfaces	RS232, Ethernet, CAN.
Dimensions	150mm*144mm*30.5mm

2.2. Nameplate & Model

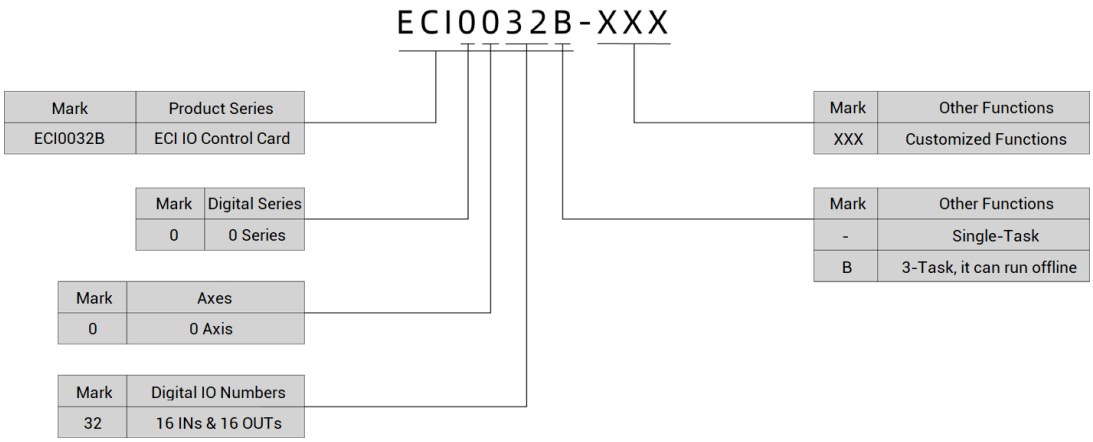

Model	Description
ECI0032	16 inputs and 16 outputs (with overcurrent protection)
ECI0032B	16 inputs and 16 outputs (with overcurrent protection), it can run offline.

2.3. Interface Definition

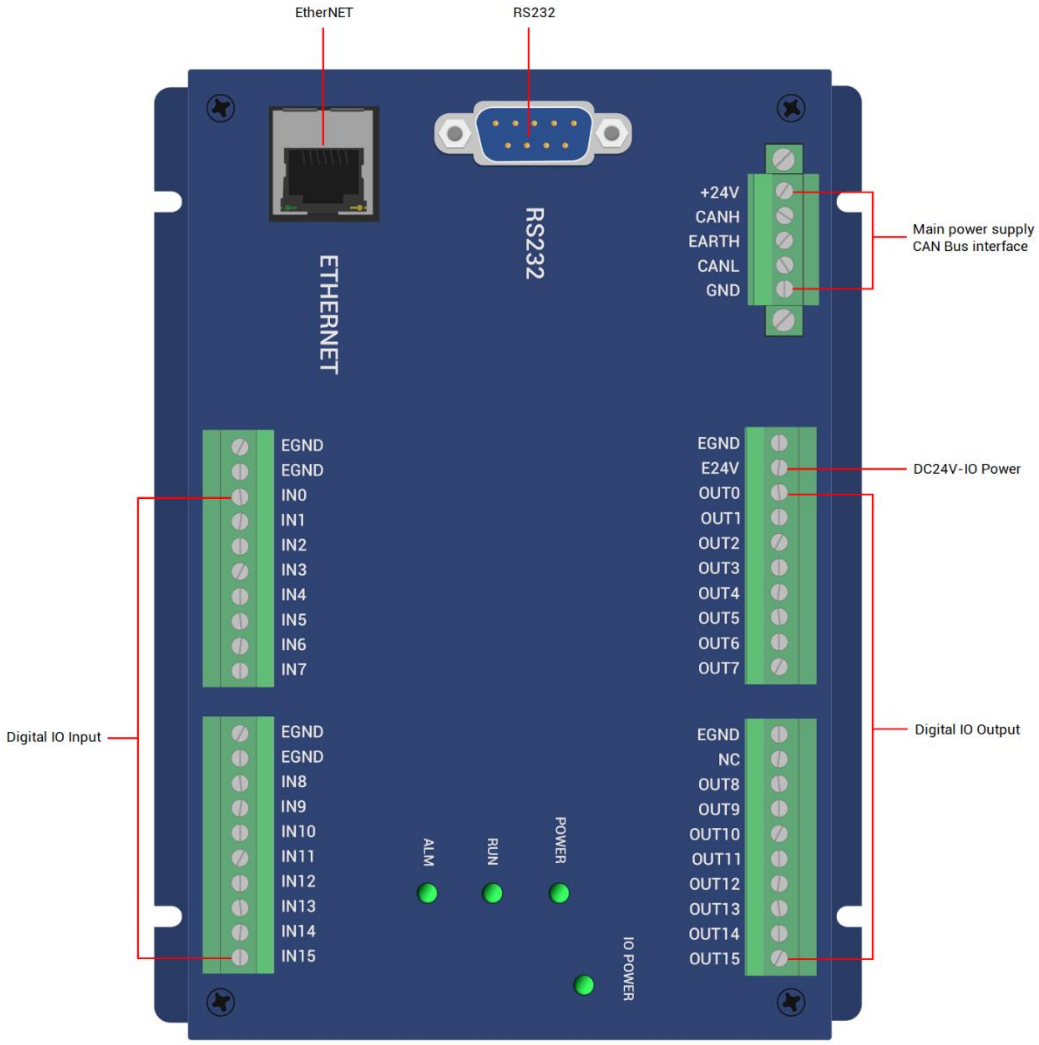

→ Interface Description

Mark	Interface	Number	Description
IO POWER	Status Indication Led	1	IO Power indicator: it lights when IO power is conducted.

POWER		1	Power indicator: it lights when power is conducted.
RUN		1	Run indicator: it lights when runs normally
ALM		1	Error indicator: it lights when runs abnormally
RS232	RS232 serial port	1	Use MODBUS_RTU protocol
ETHERNET	Net port	1	Use MODBUS_TCP protocol, expand Ethernet through interchanger, the number of net port channels can be checked through "?*port", default IP address id 192.168.0.11
+24V	Main power	1	24V DC power supplies for control card.
E24V	IO Power Supply	1	24V DC power supplies for IO power.
CAN	CAN bus interface	1	Connect to CAN expansion module and CAN equipment of other standards
IN	Digital IO input	16	NPN type, IO 24V supplies the power.
OUT	Digital IO output	16	NPN type, IO 24V supplies the power.

2.4. Work Environment

Item		Parameters
Work Temperature		-10℃-55℃
Work relative Humidity		10%-95% non-condensing
Storage Temperature		-40℃ ~ 80℃ (not frozen)
Storage Humidity		Below 90%RH (no frost)
vibration	Frequency	5-150Hz
	Displacement	3.5mm(directly install)(<9Hz)
	Acceleration	1g(directly install)(>9Hz)
	Direction	3 axial direction
Shock (collide)		15g, 11ms, half sinusoid, 3 axial direction
Degree of Protection		IP20

Chapter III Wiring & Communication

3.1. Power Input, CAN Communication Interface

The power supply input adopts a 5Pin (there are all 5 terminals, +24V, CANH, EARTH, CANL and EGND) screw-type pluggable wiring terminal, and the interval (means the gap distance between two ports) should be 3.81mm. This 5Pin terminal is the power supply shared by control card and CAN communication.

→ Terminal Definition:

Terminal	Name	Type	Function
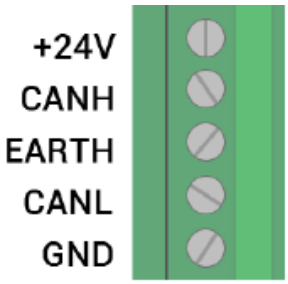	+24V	Input	Input for power 24V
	CANH	Input/Output	CAN differential data +
	EARTH	Grounding	Shield
	CANL	Input/Output	CAN differential data -
	EGND	Input	Power ground

Note:

Please separate internal power supply 24V from external IO power 24V, they cannot use the same power supply. Or use one power supply that can output two isolated 24V powers.

Terminal	Name	Type	Function
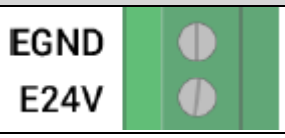	EGND	Input	IO Power Ground
	E24V	Input	Input for power 24V

Note:

Please separate internal power supply 24V from external IO power 24V, they cannot use the same power supply. Or use one power supply that can output two isolated 24V powers.

3.1.1. Power Supply Specification

→ Specification for Main Power Supply

Item	Description
Voltage	DC24V (-5%~5%)
Current to open	≤0.5A
Current to work	≤0.4A
Anti-reverse connection	Valid
Overcurrent Protection	Valid

→ Specification for IO Power Supply

Item	Description
Voltage	DC24V (-5%~5%)
Current to open	≤0.15A
Current to work	≤0.1A
Anti-reverse connection	Valid
Overcurrent Protection	Valid

3.1.2. CAN Communication Specification & Wiring

The CAN interface of the control card adopts the standard CAN communication protocol, which mainly includes three ports, CANL, CANH and the public end. And it supports connecting CAN expansion modules and other standard CAN devices.

→ Specification

Item	Description
Max Communication Rate (bps)	1Mbps
Terminal Resistor	120Ω

Topology	Daisy chain connection structure
The number of nodes can be extended	Up to 16
Communication Distance	The longer communication distance is, the lower communication rate is, max 30m is recommended.

→ Wiring Reference

Connect the CANL and CANH of the standard CAN module to the CANL and CANH of the other side correspondingly. And public ends of the CAN bus communication both parties are connected to together. In CAN bus left and right sides, connect a 120Ω resistor respectively (please see below graphic).

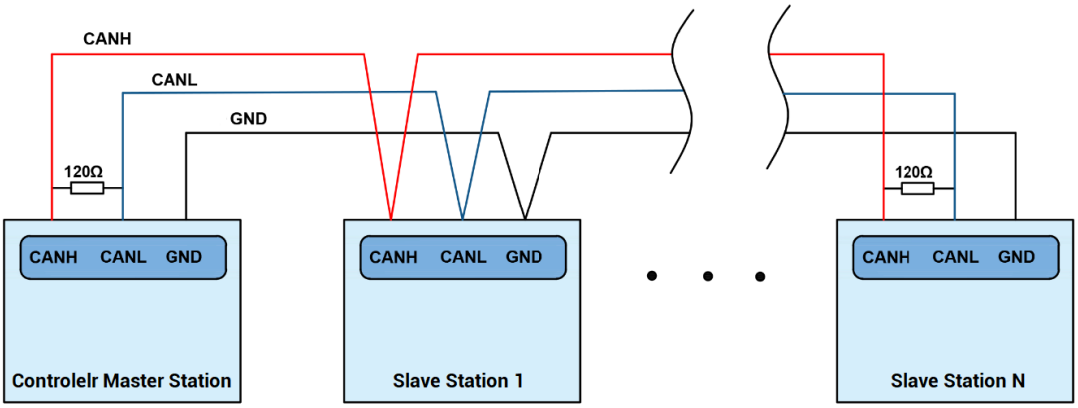

→ Wiring Notes:

- As above, the daisy chain topology is used for wiring (the star topology structure cannot be used). When the use environment is ideal and there are no many nodes, the branch structure also can be used.
- Please connect a 120Ω terminal resistor in parallel to each end of the CAN bus for matching the circuit impedance and ensuring communication stability.
- Please be sure to connect the public ends of each node on the CAN bus to prevent the CAN chip from burning out.
- Please use STP (Shielded Twisted Pair), especially in bad environments, and make

sure the shielding layer is fully grounded.

- When on-site wiring, pay attention to make the distance between strong current and weak current, it is recommended for the distance to be more than 20cm.
- It should be noted that the equipment grounding (chassis) on the entire line must be good, and the grounding of the chassis should be connected to the standard factory ground pile.

→ Cable Requirements:

Shielded Twisted Pair, and the shielded cable is grounded.

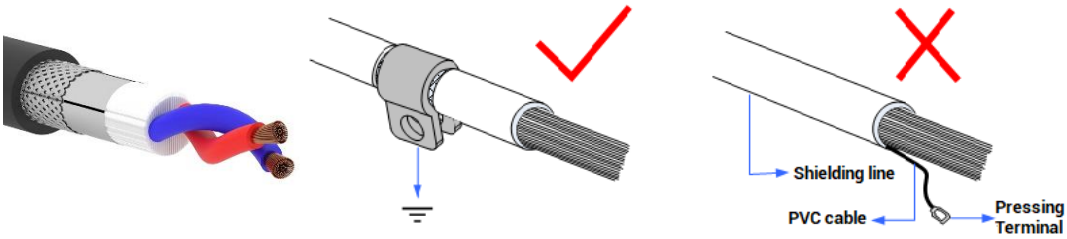

3.1.2. Basic Usage Method

(1) Please follow the above wiring instructions to wiring correctly.

(2) After powered on, please use ETHERNET or RS232 to connect to RTSys.

(3) Please use the "CANIO_ADDRESS" command to set the master's "address" and "speed" according to the needs, and use the "CANIO_ENABLE" command to enable or disable the internal CAN master function, or through "RTSys/Controller/State the Controller/Communication Info" to view the CAN status intuitively, and refer to the “Basic Programming Manual" for details.

```
CAN communication settings:
CANIO_ADDRESS = 32, CANIO_ENABLE = 1
ZCAN Master
CAN baud: 500KBPS
CAN enable: ON

Serial port configuration:
Port0:(RS232) is ModbusSlave Mode.
Address:1, variable:2
Baud:38400
DataBits:8
StopBits:1
Parity:0
```

(4) Correctly set the "address" and "speed" of the slave station expansion module according to the manual of the slave station.

(5) After all the settings are completed, restart the power supply of all stations to establish communication.

(6) Note that the "speed" settings of each node on the CAN bus must be consistent, and the "address" settings cannot cause conflicts, otherwise the "ALM" alarm light will be on, and the communication establishment will fail or the communication will be disordered.

3.2. IN: Digital Input

The digital input adopts 2 groups of 10Pin (there are 3 groups of 10 terminals) screw-type pluggable terminals, and the gap distance between terminals should be 3.81mm.

→ Wiring Definition

Terminal	Name	Type	Function 1
EGND	EGND	/	IO Public End
EGND	EGND	/	
IN0	IN0	NPN type, low-speed input	Input 0
IN1	IN1		Input 1
IN2	IN2		Input 2
IN3	IN3		Input 3
IN4	IN4		Input 4
IN5	IN5		Input 5
IN6	IN6		Input 6
IN7	IN7		Input 7

EGND	EGND	/	IO Public End
EGND	EGND	/	
IN8	IN8	NPN type, low-speed input	Input 8
IN9	IN9		Input 9
IN10	IN10		Input 10
IN11	IN11		Input 11
IN12	IN12		Input 12
IN13	IN13		Input 13
IN14	IN14		Input 14
IN15	IN15		Input 15

3.2.1. Digital Input Specification & Wiring

→ Specification

Item	Low-Speed Input (IN0-15)
Input mode	NPN, the input is triggered by low-electric level
Frequency	< 5kHz
Impedance	4.7KΩ
Voltage level	DC24V
The voltage to open	<14.5V
The voltage to close	>14.7V
Minimal current	-1.8mA (negative)
Maximum current	-6mA (negative)
Isolation mode	optoelectronic isolation
Note: the above parameters are standard values when the voltage of control card power supply (E+24V port) is 24V.	

→ Wiring Reference

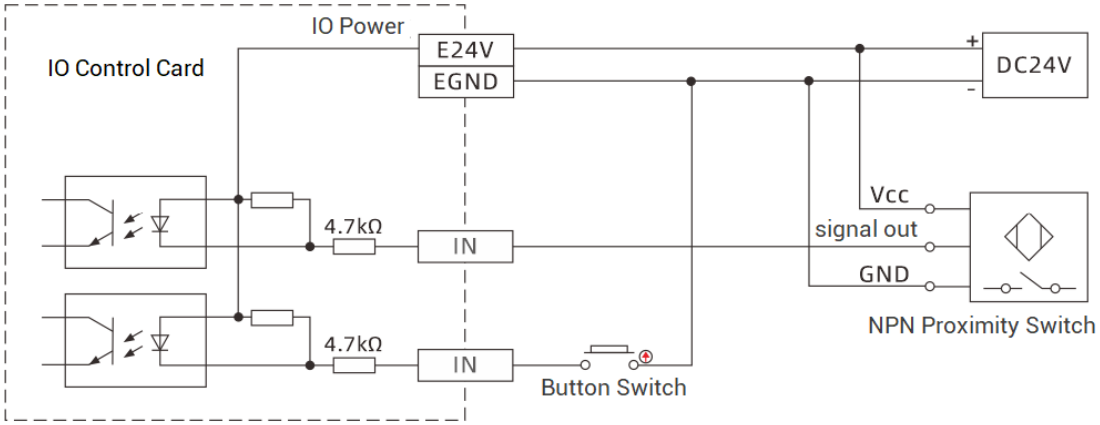

→ Wiring Note:

- The wiring principle of low-speed digital input IN (0-15) is shown in the figure above. The external signal source can be an optocoupler, a key switch or a sensor, etc., all can be connected as long as the requirements on output of electric level can be achieved.
- For the public end, please connect the "EGND" port on the IO to the "COM" terminal of the external input device. If the signal area power supply of the external device and the power supply of the controller are in the same power supply system, this connection also can be omitted.

3.2.2. Basic Usage Method

(1) Please follow the above wiring instructions to wiring correctly.

(2) After powered on, please select ETHERNET or RS232 to connect to RTSys.

(3) State values of relative input ports can be read directly through "IN" command, also, it can be read through "RTSys/Tool/In". Please refer to "Basic" for details.

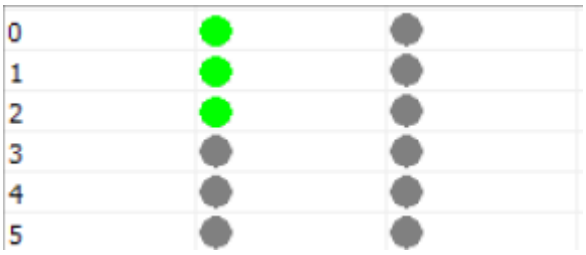

3.3. OUT: Digital Output

The digital output adopts 2 sets of 10Pin screw-type pluggable terminals with a spacing of 3.81mm.

→ Wiring Definition

Terminal	Name	Type	Function 1
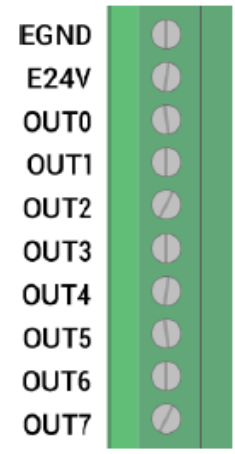	EGND	/	IO Power Ground / IO Public End
	E24V	/	IO DC Power 24V
	OUT0	NPN type, low-speed output	Output 0
	OUT1		Output 1
	OUT2		Output 2
	OUT3		Output 3
	OUT4		Output 4
	OUT5		Output 5
	OUT6		Output 6
	OUT7		Output 7
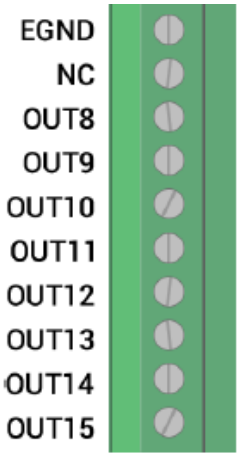	EGND	/	IO Public End
	NC		Reserved
	OUT8	NPN type, low-speed output	Output 8
	OUT9		Output 9
	OUT10		Output 10
	OUT11		Output 11
	OUT12		Output 12
	OUT13		Output 13
	OUT14		Output 14
	OUT15		Output 15

3.3.1. Digital Output Specification & Wiring

→ Specification

Item	Low Speed Output (OUT0-15)
Output mode	NPN type, it is 0V when outputs

Frequency	< 8kHz
Voltage level	DC24V
Max output current	+300mA
Max leakage current when off	25μA
Respond time to conduct	12μs
Respond time to close	80μs
Overcurrent protection	Support
Isolation method	optoelectronic isolation

Note:

- ✧ The times in the form are typical based on the resistive load, and may change when the load circuit changes.
- ✧ Due to the leak-type output, the shutdown of the output will be obviously affected by the external load circuit, and the output frequency should not be set too high in the application. For low-speed output, it is recommended to be lower than 8HKz. If there needs higher speed, please contact us to adjust parameter or custom hardware.

→ Wiring Reference

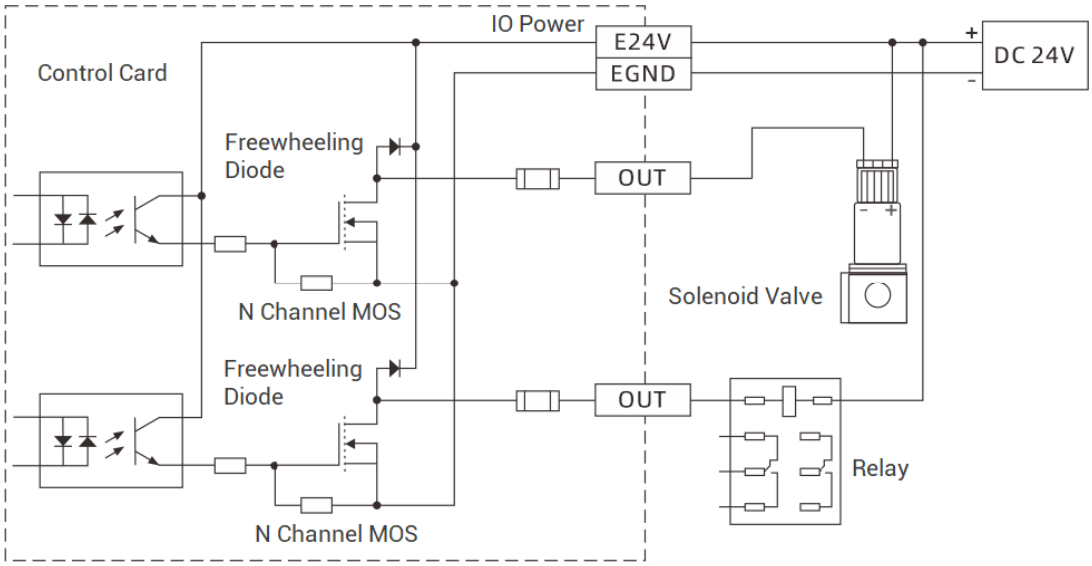

→ Wiring Note:

- The wiring principle of low-speed digital output OUT (0-15) is shown in the figure above. The external signal receiving end can be an optocoupler or a relay or solenoid valve, all can be connected as long as the input current does not exceed 300mA.

- For the connection of the public end, please connect the "EGND" port on the power supply to the negative pole of the DC power supply of the external input device. If the DC power supply of the external device and the controller power supply are in the same power supply system, this connection can also be omitted.

3.3.2. Basic Usage Method

(1) Please follow the above wiring instructions to wiring correctly.

(2) After powered on, please use ETHERNET or RS232 to connect to RTSys.

(3) Open or close output port directly through “OP” command, also, it can be opened or closed through “RTSys/Tool/Op". Please refer to “Basic" for details.

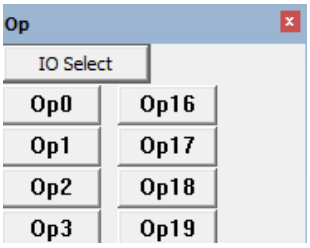

3.4. RS232 Serial Port

RS232 is in one standard DB9 male socket and supports MODBUS_RTU protocol and custom communication.

→ Interface Definition

Terminal	PIN	Name	Type	Function
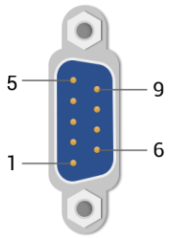	1, 4, 6, 7, 8	NC	Spare	Reserved
	2	RXD	Input	RS232 signal, receive data
	3	TXD	Output	RS232 signal, send data
	5	GND	Output	Negative pole output of 5V power, and output for the public end

	9	+5V	Output	Positive pole output of 5V power, maximum is 300mA

3.4.1. RS232 Interface Specification & Wiring

→ Specification:

Item	RS232
Maximum Communication Rate (bps)	115200
Terminal Resistor	No
Topology Structure	Connect correspondingly (1 to 1)
The number of nodes can be extended	1
Communication Distance	The Longer communication distance is, the lower communication rate is, maximum 5m is recommended.

→ Wiring Reference:

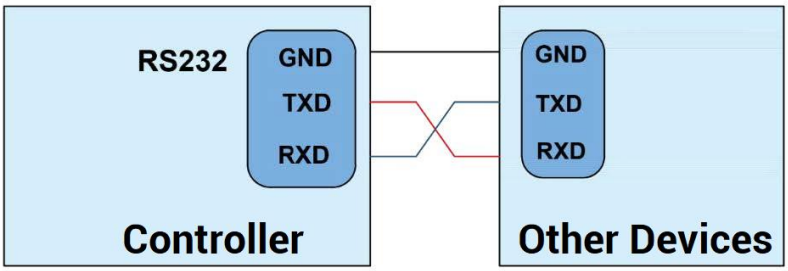

→ Wiring Notes:

- The wiring of RS232 is as above, it needs to cross-wiring for sending and receiving signals, and it is recommended to use a double-female head cross line when connecting to a computer.
- Please be sure to connect the public ends of each communication node to prevent the communication chip from burning out.
- Please use STP, especially in bad environments, and make sure the shielding layer is fully grounded.

3.4.2. Basic Usage Method

(1) Please follow the above wiring instructions to wiring correctly.

(2) After powered on, please use any ETHERNET or RS232 (there is default parameter, which can be connected directly) to connect to RTSys.

(3) Please use the "ADDRESS" and "SETCOM" commands to set and view the protocol station number and configured parameters, see "Basic Programming Manual" for details.

(4) According to their respectively instructions, correctly set the relevant parameters of the third-party equipment to match the parameters of each node.

(5) When all is configured, it can start to do communicating.

(6) Communication data of RS232 can be directly viewed through “RTSys / Controller / State the Controller / CommunicationInfo”.

```
CAN communication settings:
CANIO_ADDRESS = 32, CANIO_ENABLE = 1
ZCAN Master
CAN baud: 500KBPS
CAN enable: ON

Serial port configuration:
Port0:(RS232) is ModbusSlave Mode.
Address:1, variable:2
Baud:38400
DataBits:8
StopBits:1
Parity:0
```

3.5. ETHERNET

ECI0032 network IO control card has an Ethernet port, and it supports MODBUS_TCP protocol and custom communication, and the default IP address is 192.168.0.11. The pin definition is as follows:

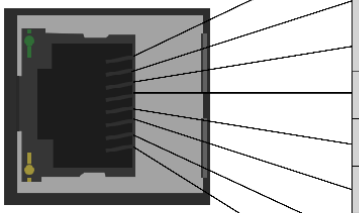

PIN	Signal	Description
1	TX+	Send signal (+)
2	TX-	Send signal (-)
3	RX+	Receive signal (+)
4	NC	Reserved
5	NC	Reserved
6	RX-	Receive signal (-)
7	NC	Reserved
8	NC	Reserved

The Ethernet port of the controller can be connected to a computer, HMI, etc. through an Ethernet cable, and using point to point connection method. The schematic diagram is as follows:

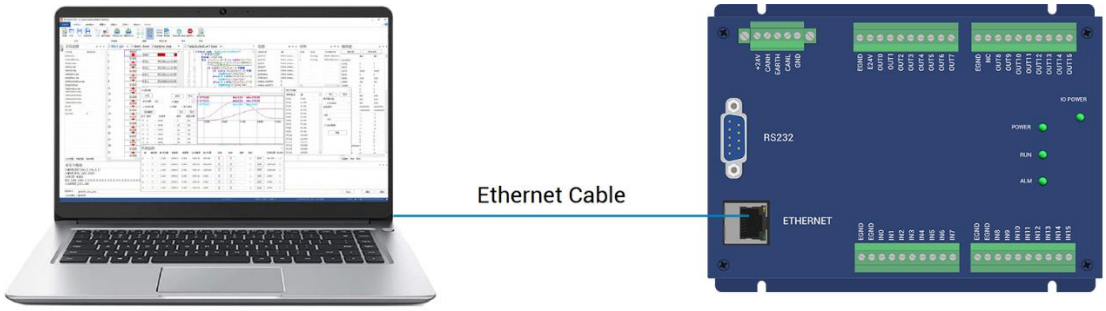

Personal PC
IP: 192.168.0.xxx (XXX≠11, it is OK)

ECI0032
Default IP: 192.168.0.11

The controller can also be connected to the interchanger through an Ethernet cable, and then use interchanger to connect to other devices, then multi-point connection can be achieved. The schematic diagram is as follows:

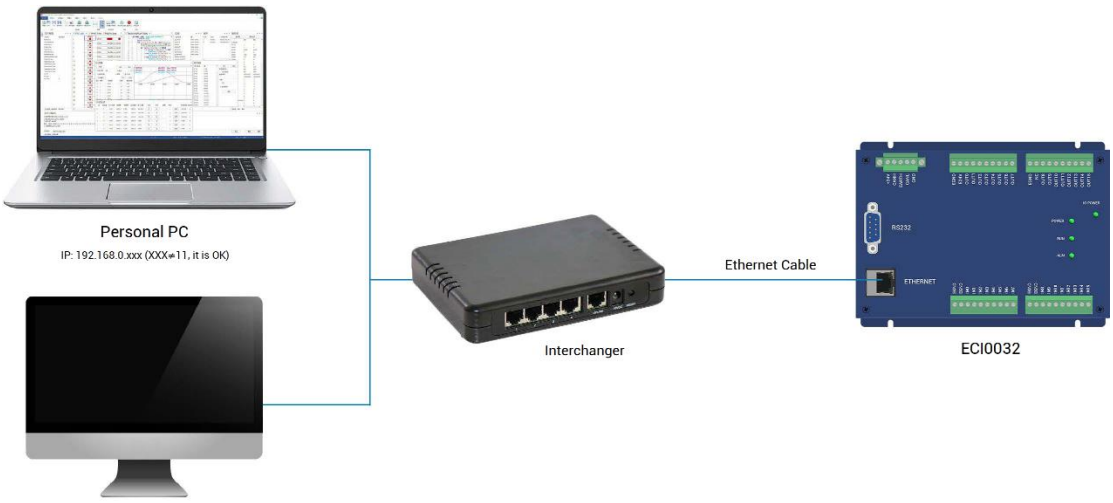

→ Communication Cable Requirements

ETHERNET communication interface adopts standard Ethernet RJ45 interface.

The network cable adopts Category 5e STP, and the crystal head has a metal shell to reduce interference and to prevent information from being eavesdropped. As shown below:

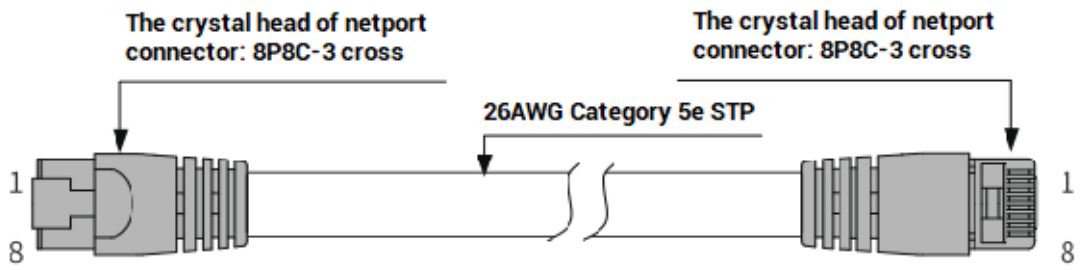

Item	Specification
Cable type	Flexible crossover cable, Category 5e
traverse	twisted pair
Line pairs	4
Isolation	cross skeleton
Connector	Crystal head with iron shell
Cable material	PVC
Cable length	Less than 100m

Use RJ45 network cable connection method:

- When installing, hold the crystal head that is with the cable and insert it into the RJ45 interface until it makes a "click" sound (kada).
- In order to ensure the stability of communication, please fix the cables with cable ties.
- When disassembling, press the tail mechanism of the crystal head, and pull out the connector and the module in a horizontal direction.

Please use tube-type pre-insulated terminals and cables with appropriate wire diameters to connect the user terminals.

Chapter IV Expansion Module

The control card can expand digital IO and analogs AD/DA through CAN bus, ZIO series CAN bus expansion modules or ZMIO310-CAN series bus expansion modules can be selected. For details, please refer to corresponding user manuals.

4.1. Configure as CAN Expansion Module

4.1.1. ZCAN Slave Protocol Configuration

ECI0032 is used as IO control card by default. When it is configured as the CAN bus slave station, ECI0032 can be used as digital IO expansion module.

When ECI0032 is used as ZIO expansion module, using CANIO_ADDRESS to configure CAN address and CAN communication speed. CAN ID addresses correspond to expanded IO number. For example, when CANIO_ADDRESS=1, IO Number of expanded ECI0032 starts from 32 to 63. After CANIO_ADDRESS parameters modified, it is saved into FLASH automatically, and it will take effect after restart.

CAN Address	Starting IO No.	End IO No.
0	16	47
1	32	63
2	48	79
3	64	95
4	80	111
5	96	127
6	112	143
7	128	159
8	144	175
9	160	191
10	176	207
11	192	223
12	208	239
13	224	255

14	240	271
15	256	287

When IO number ranges of control card or expansion module repeat, only one is valid. Therefore, it is recommended to configure CANIO_ADDRESS again to make them different.

ECI0032 is as CAN communication master station by default, but when it is used as ZIO expansion module. If you need it to be as CAN slave station, please configure CAN address and communication ratio again. It can configure CANIO_ADDRESS parameter through online command.

For example:

CANIO_ADDRESS = 1

'set CAN ID to 1, at this time, it is slave station used for ZCAN slave station. 500KBPS

CANIO_ADDRESS = 2 +256

'set CAN ID to 2, at this time, it is slave station used for ZCAN slave station. 250KBPS

CANIO_ADDRESS = 3 +512

'set CAN ID to 3, at this time, it is slave station used for ZCAN slave station. 125KBPS

CANIO_ADDRESS = 4 +768

'set CAN ID to 4, at this time, it is slave station used for ZCAN slave station. 1MBPS

4.1.2. CAN Expansion, Wiring of Master Station

ECI0032 supports ZCAN slave protocol, and it can be used as ZIO expansion module for other controllers through CAN protocol.

Wiring reference:

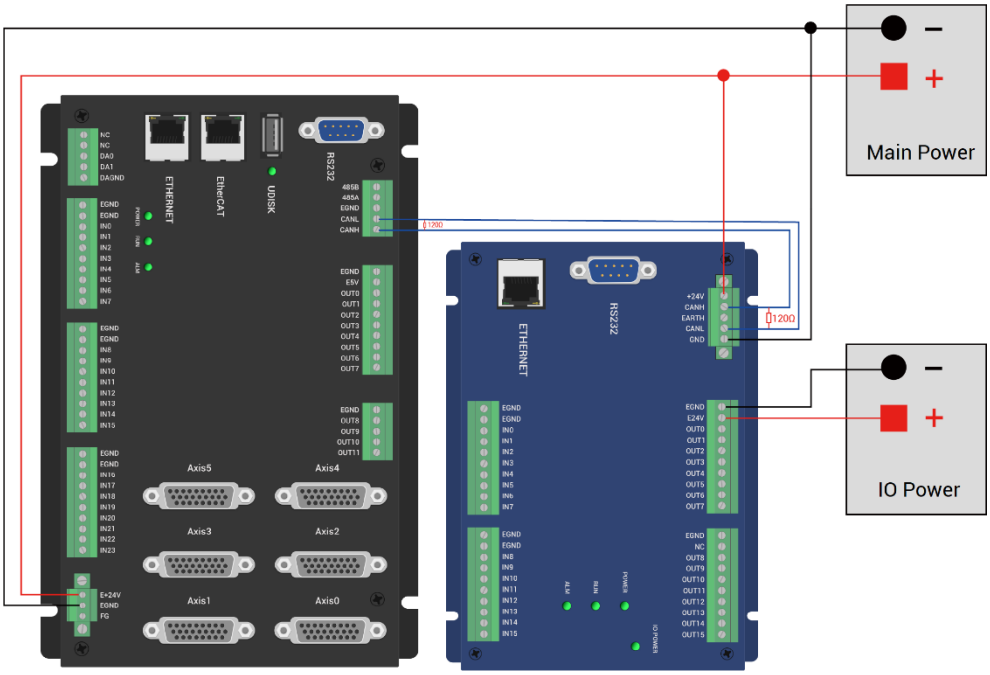

→ Wiring Note:

- ✧ When connecting multiple ZIO expansion modules on the CAN bus, a 120-ohm resistor needs to be connected in parallel between the CANL and CANH terminals.
- ✧ Please use STP to ensure communication quality and the shield layer is connected to ground.
- ✧ Please use the same power supply for internal powers of controller and expansion module.

4.2. CAN Bus Expansion

ZIO series expansion modules or ZMIO310-CAN coupler with sub modules can be used.

Connect control card to CAN bus expansion modules, when the eighth bit of the DIP switch of the expansion module is turned to ON, which indicates that a 120 ohm resistor has been connected, but needs to connect one 120 ohm resistor externally. When connecting multiple CAN expansion modules, you only need to dial ON for the eighth digit of the last expansion module, which means please do not dial bit-8 of other modules.

4.2.1. CAN Expansion Wiring

The ZIO expansion module is powered by the dual power supply. Except the main power supply, an additional IO power supply is required to supply independent power for IO. Both the main power supply and the IO power supply use 24V DC power supply. For ZAIO, it only needs to connect to the main power supply.

To prevent interference, separate the IO power supply from the main power supply.

Please select the expansion module according to the requirements, and select IO mapping or axis mapping according to the resources of the expansion module.

Wiring reference of connection between ZIO expansion module and control card and standard wiring of CAN bus are shown as below.

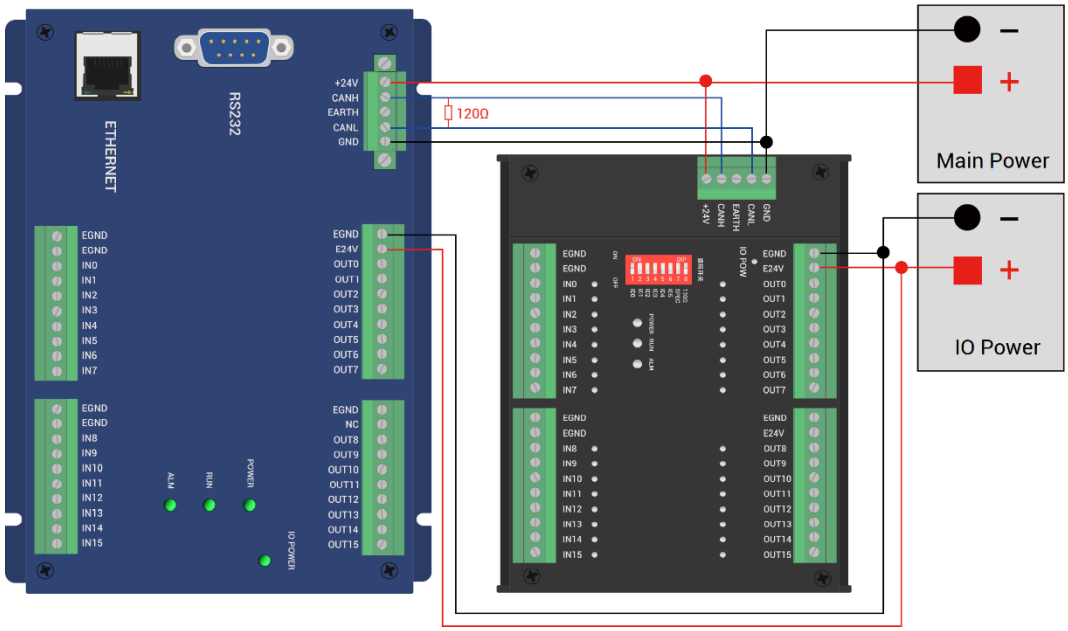

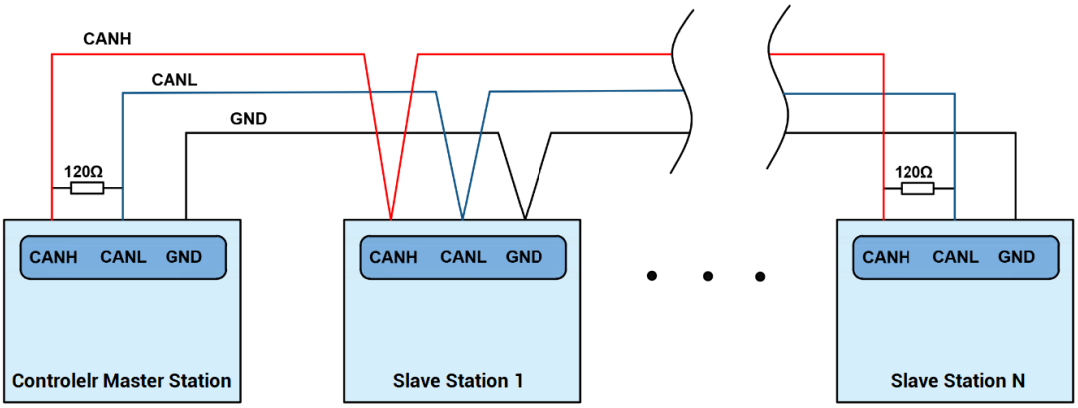

→ Wiring Note:

- ECI0032 control card uses dual-power, and ZIO expansion module uses dual-power. When using, main power supply of expansion module and main power supply of controller can share one power. When they use different power supplies, controller power EGND needs to connect to expansion module power GND, otherwise CAN may be burnt out.
- When connecting multiple ZIO expansion modules on the CAN bus, a 120-ohm resistor needs to be connected in parallel between the CANL and CANH terminals, for the ZIO expansion module that is with 8-digit dialing codes, the terminal resistor can be realized by dialing the code (DIP).

4.2.2. CAN Bus Expansion Resources Mapping

The ZCAN expansion module generally has an 8-bit DIP switch, dial ON to take effect, and the meaning of the DIP is as follows:

1-4: they are used for ZCAN expansion module IO address mapping, the corresponding value is 0-15.

5-6: CAN communication speed, corresponding value is 0-3, four different speeds are optional.

7: reserved.

8: 120 ohm resistor, dial ON means a 120 ohm resistor is connected between CANL and CANH.

The IO numbers of the entire control system cannot be repeated, and existed numbers must be avoided when mapping resources. And the DIP switch must be dialed before power-on, if re-dial after power-on, it is invalid. It needs to be powered on again to take effect.

Dial 1-4 to select the CAN address, and the controller sets the IO number range of the corresponding expansion module according to the CAN DIP address. When each is dialed as OFF, the corresponding value is 0, when it is ON , it corresponds to a value of 1, and the address combination value = dial 4 × 8 + dial code 3 × 4 + dial code 2 × 2+ dial code 1.

Dial code 5-6 to select CAN bus communication speed, speed combination value=dial code 6 × 2 + dial code 5×1, the combined value range is 0-3.

The corresponding speeds are as follows:

DIP 5-6 combination value	CANIO_ADDRESS high 8-bit value	CAN communication speed
0	0 (corresponds to decimal 128)	500KBPS (default value)
1	1 (corresponds to decimal 256)	250KBPS
2	2 (corresponding to decimal 512)	125KBPS
3	3 (corresponding to decimal 768)	1MBPS

The controller side sets the CAN communication speed through the CANIO_ADDRESS command. There are also four speed parameters that can be selected. The communication speed must be consistent with the communication speed of the expansion module that corresponds to the combination value, then they can communicate with each other.

The factory default communication speed is 500 KBPS on both sides, there is no need to set this, unless you need to change the speed.

The CANIO_ADDRESS command is a system parameter, and it can set the master-slave end of CAN communication. The default value of the controller is 32, that is, CANIO_ADDRESS=32 is the master end, and the slave end is set between 0-31.

The CAN communication configuration can be viewed in the "State the Controller" window.

→ IO Mapping:

the CAN expansion module uses bit1-4 of the DIP switch. According to the number of currently included IO points (the largest number value in IN and OP must be included, that is, IO point in the axis interface should be included), use the bit 1-4 to set the ID, so as to determine the number range of IO to be expanded.

If the controller itself contains 28 INs and 16 OPs, then the starting address set by the first extended board should exceed the maximum value of 28. According to below rule, the dial code should be set to the combination value 1 (binary combination value 0001, from right to left, dial code 1-4, at this time dial 1 is set to ON, and the others are set to OFF), the IO number on the expansion board = the expansion board number value + the initial IO number value, among them, the IOs that are vacant from 29-31 Numbers are not used. Subsequent extended boards continue to confirm the dial settings according to the IO points in turn.

The initial digital IO mapping number starts from 16 and increases in multiples of 16. The distribution of digital IO numbers corresponding to different dial IDs is as follows:

DIP 1-4 combination value	Starting IO number	Ending IO number
0	16	31
1	32	47
2	48	63
3	64	79
4	80	95
5	96	111
6	112	127
7	128	143
8	144	159
9	160	175
10	176	191
11	192	207
12	208	223
13	224	239
14	240	255
15	256	271

The initial IO mapping number of the analog AD starts from 8 and increases in multiples of 8. The initial IO mapping number of the analog DA starts from 4 and increases in multiples of 4. The allocation of digital IO numbers corresponding to different dial code IDs is as follows:

DIP 1-4 combination value	Starting AD number	End AD number	Starting DA number	End DA number
0	8	15	4	7

1	16	23	8	11
2	24	31	12	15
3	32	39	16	19
4	40	47	20	23
5	48	55	24	27
6	56	63	28	31
7	64	71	32	35
8	72	79	36	39
9	80	87	40	43
10	88	95	44	47
11	96	103	48	51
12	104	111	52	55
13	112	119	56	59
14	120	127	60	63
15	128	135	64	67

Chapter V Programming

5.1. Program in RTSys Software

RTSys is a PC-side program development, debugging and diagnostic software for the Zmotion motion controllers. Through it, users can easily edit and configure the controller program, quickly develop applications, diagnose system operating parameters in real time, and debug the running program in real time. What's more, it supports Chinese and English bilingual environments.

In RTSys, there are 4 programming languages for motion control development, Basic, PLC, HMI and C language, they can run multi-tasks among them, especially for Basic, multi-task running can be achieved separately, hybrid programming is also OK with PLC, HMI and C language.

RTSys Downloading Address: https://www.zmotionglobal.com/pro_info_282.html

And related manuals can be found in "Download":

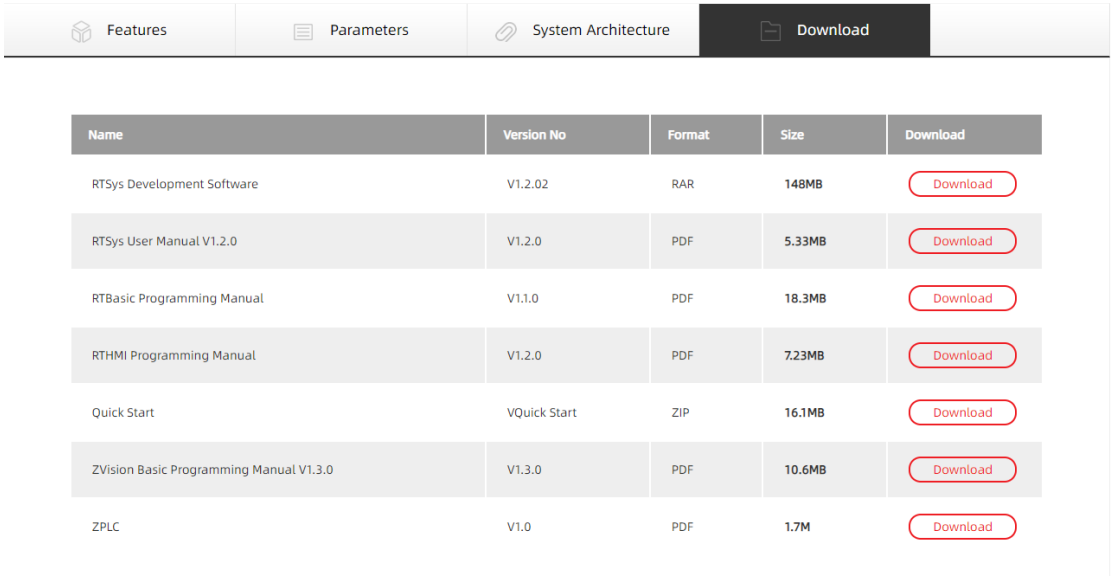

Name	Version No	Format	Size	Download
RTSys Development Software	V1.2.02	RAR	148MB	Download
RTSys User Manual V1.2.0	V1.2.0	PDF	5.33MB	Download
RTBasic Programming Manual	V1.1.0	PDF	18.3MB	Download
RTHMI Programming Manual	V1.2.0	PDF	7.23MB	Download
Quick Start	VQuick Start	ZIP	16.1MB	Download
ZVision Basic Programming Manual V1.3.0	V1.3.0	PDF	10.6MB	Download
ZPLC	V1.0	PDF	1.7M	Download

Step	Operations	Display Interface
1	Switch the Language: "Language" – "English", then there will pop	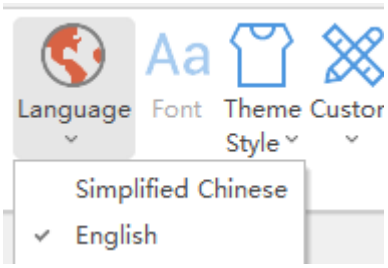

	up one window, click OK, and restart it.	Language Switch Video Showing: E. How to Switch the Language Find "视图" (the fourth one in the above menu), then find the "语言", choose English, restart RTSys. Enligsh RTSys will take effect when opened again. 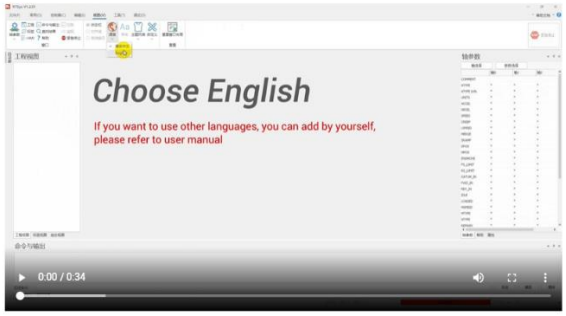
2	New Project: "File" – "New Project", Save as window will pop up, then enter file name, save the project file with suffix "zpj.".	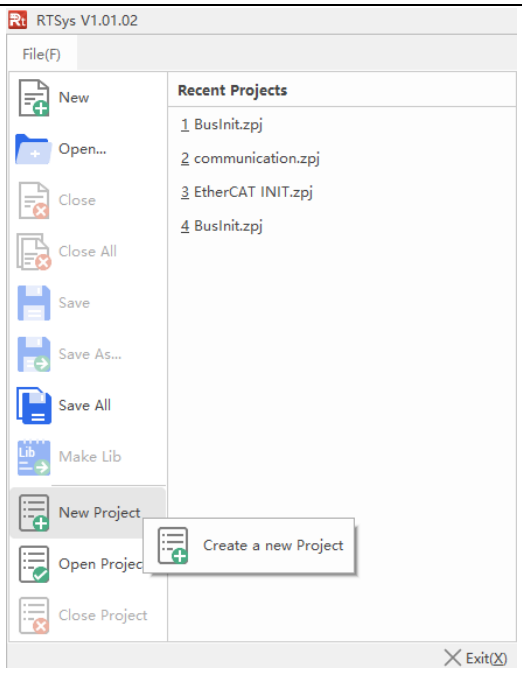 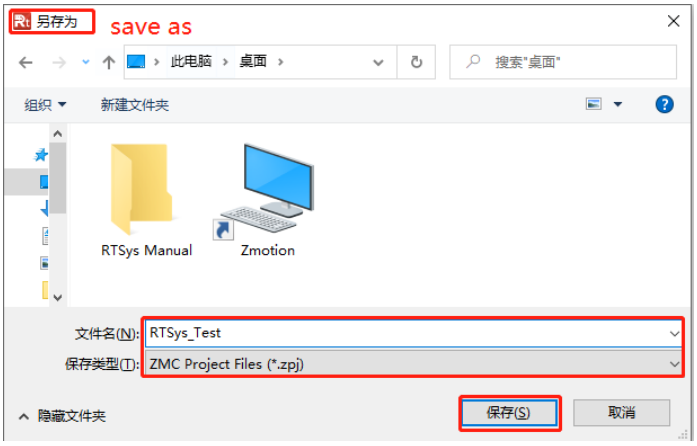

3	New File: “File” – “New File”, select file type to build, here select Basic, click “OK”.	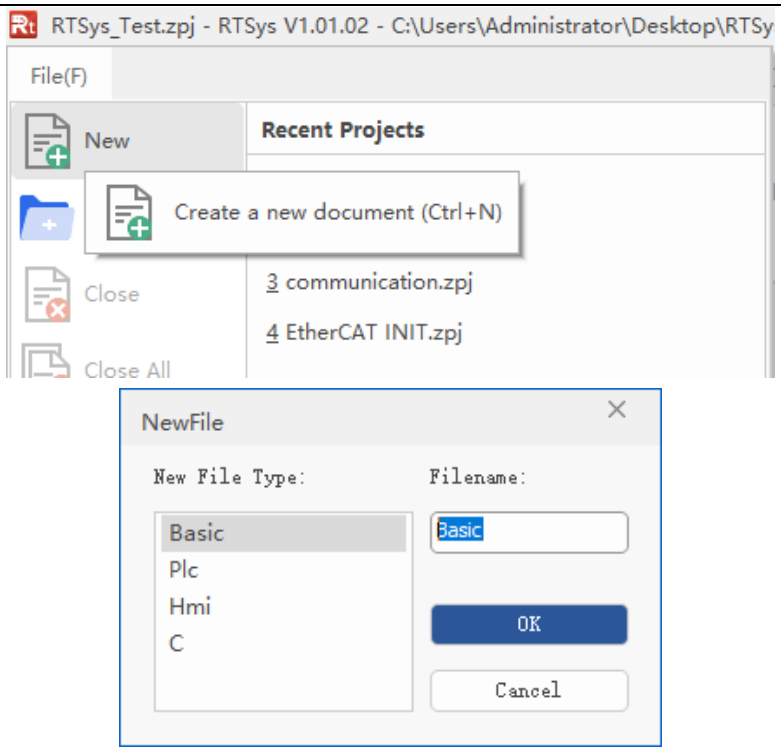
4	Set Auto Run No.: right click the file, open task number setting window, enter task No., which can be any + value, no priority, but not the same.	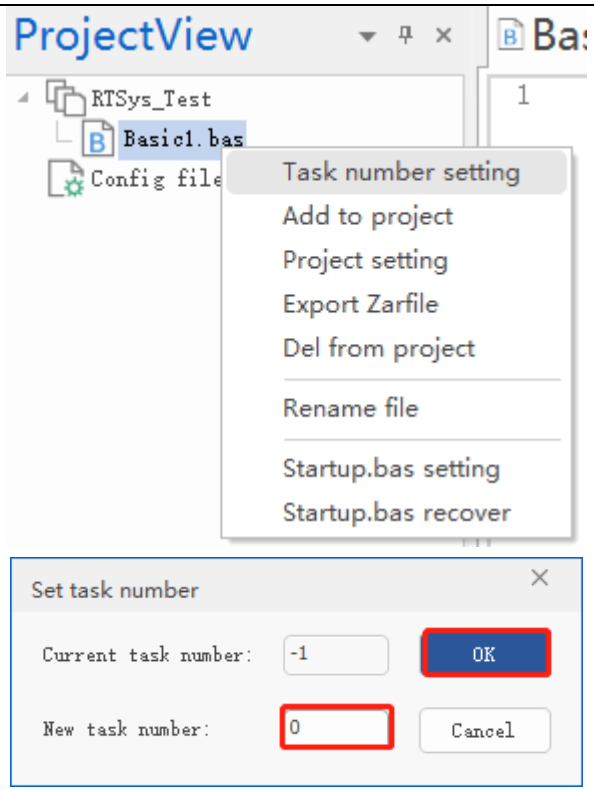

5	Save File: edit the program in program editing window, click "save", new built file will be saved under "zpj." project automatically. "Save all" means all files under this project will be saved.	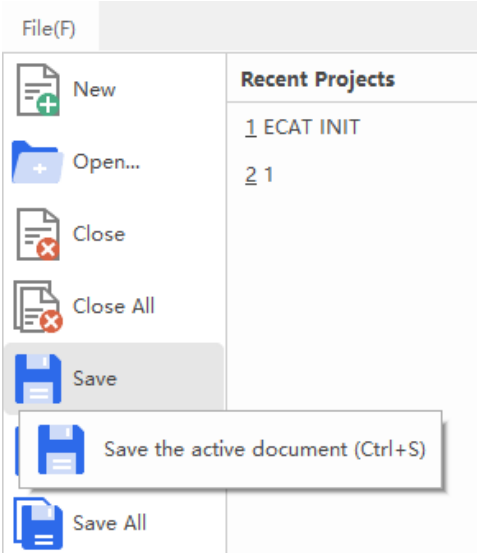
6	Connection: Click "controller – connect", if no controller, select connect to simulator.	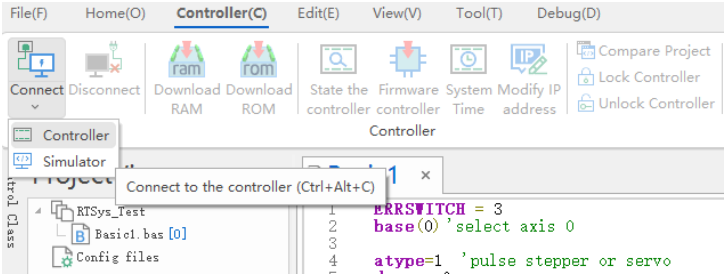
	Then, "connect to controller" window will pop up, you can select serial port or net port to connect, select matched serial port parameters or net port IP address, then click "connect".	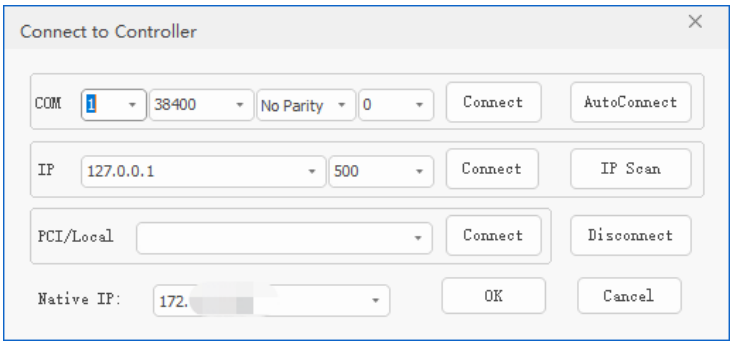
7	Download Program into	• **RAM:** it will not save when power off. • **ROM:** it will save data when power off, and when the program

	Controller: "Ram/Rom" – "download RAM / download ROM", if it is successful, there is print indication, at the same time, program is downloaded into controller and runs automatically.	is connected to controller again, running according to task No. 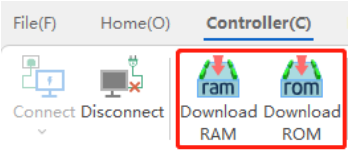 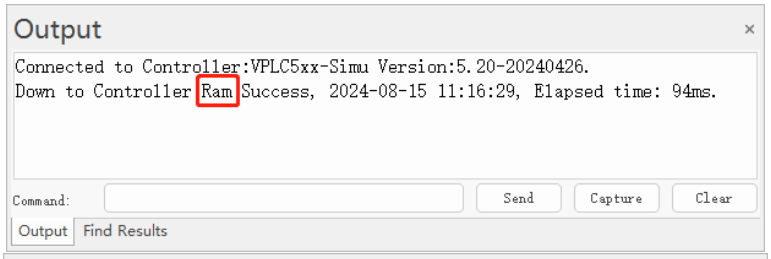 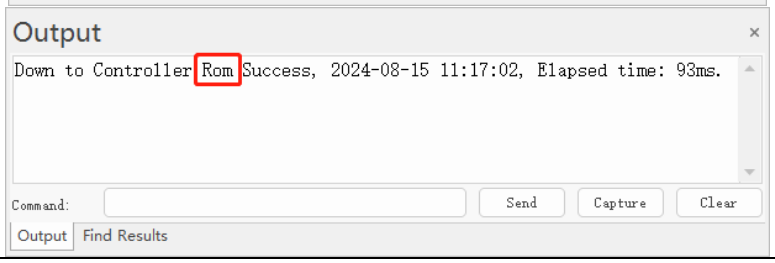
8	Debug: "Debug" – "Start/Stop Debug" to call "Task" and "Watch" window, because it was downloaded before, here select "Attach the current".	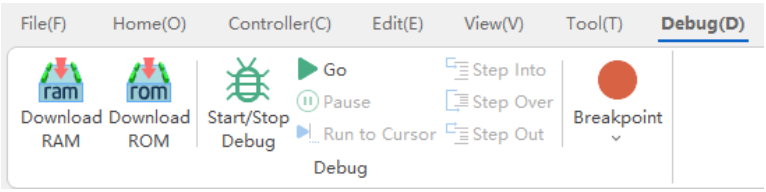 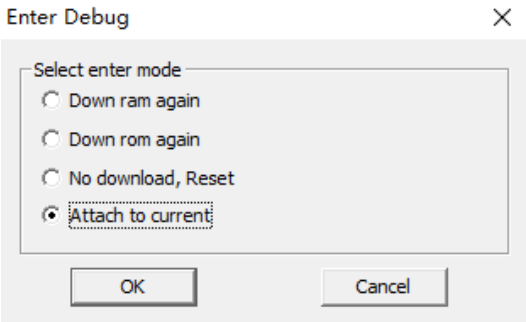
9	Scope function: Click "View" – "Scope" to open oscilloscope. It can capture needed data, for debugging.	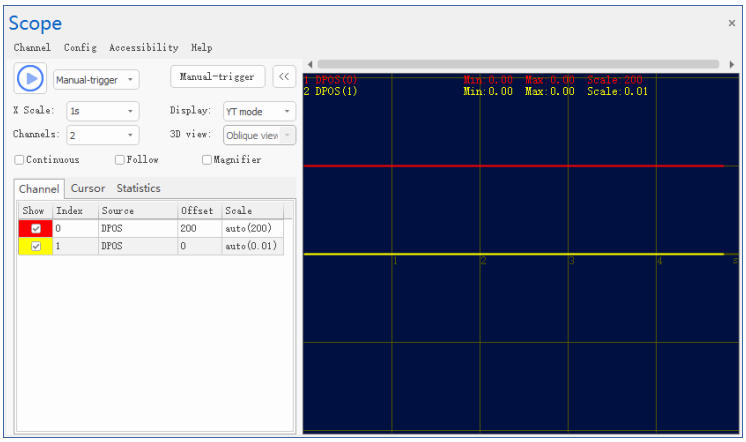

Notes:

- When opening an project, choose to open the zpj file of the project. If only the Bas file is opened, the program cannot be downloaded to the controller.
- When the project is not created, only the Bas file cannot be downloaded to the controller.
- The number 0 in automatic operation represents the task number, and the program runs with task 0, and the task number has no priority.
- If no task number is set for the files in the entire project, when downloading to the controller, the system prompts the following message WARN: no program set autorun

5.2. Upgrade Controller Firmware

Firmware upgrade can be achieved by downloading zfm firmware package in RTSys. zfm file is the firmware upgrade package of controller, please select corresponding firmware because different models are with different packages, please contact manufacturer).

How to update:

a. Open ZDevelop / RTSys software, then click "controller – connect", find PCI/LOCAL method, click "connect". If connected, there will be "Connected to Controller: PCIE464 Version: 4.93 – 20231220." In "output" window.

b. Click "controller – state the controller", find basic info, then current software version can be checked.

c. Click "controller – update firmware", current controller model and software version can be viewed.

d. Click "browse", and select saved firmware file, click "update", then one window will pop up, please click "ok".

e. After that, "connect to controller" window appears again, and please select "PCI/Local" again, and click "connect".

f. When connection is successful, "firmware update" interface is shown. Now

system enters ZBIOS state, please click “update” again.

g. When it is loaded, “firmware update” window disappears, now in output window, it shows “Update firmware to Controller Success”.

h. Do step a and step b again, check whether the firmware is updated or not.

5.3. Program in Host-Computer by PC Languages

The controller supports development under various operating systems such as windows, linux, Mac, Android, and wince, and provides dll libraries in various environments such as vc, c#, vb.net, and labview, as shown in the figure below. PC software programming refers to "Zmotion PC Function Library Programming Manual".

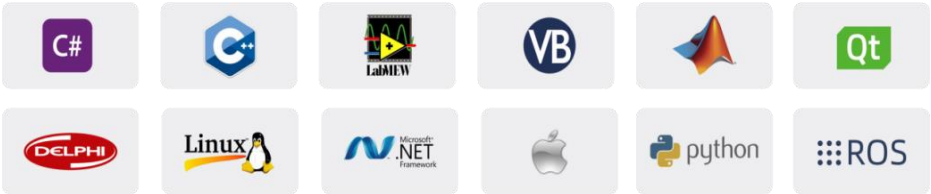

The program developed using the PC software cannot be downloaded to the controller, and it is connected to the controller through the dll dynamic library. The dll library needs to be added to the header file and declared during development.

- Get PC library file, example: https://www.zmotionglobal.com/download_list_17.html

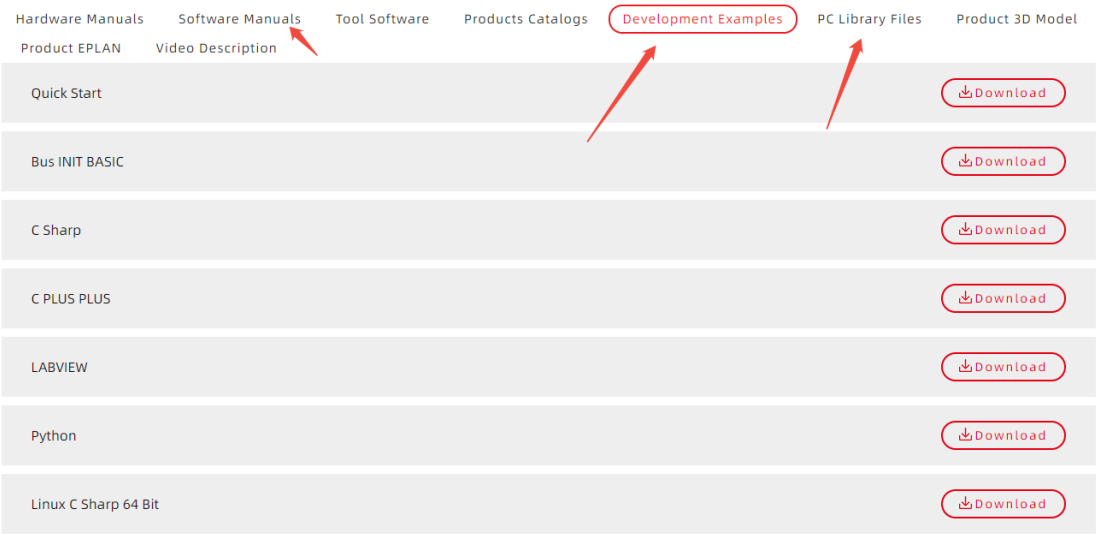

The c++ project development process in VS is as follows:

Step	Operations	Display Interface
1	Open VS, click “File” – “New” – “Project”.	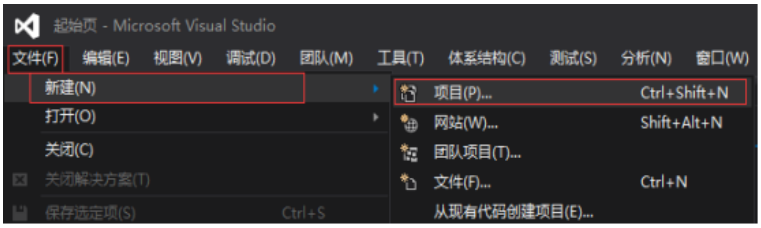
2	Select development language as “Visual C++” and the select program type as “MFC application type”.	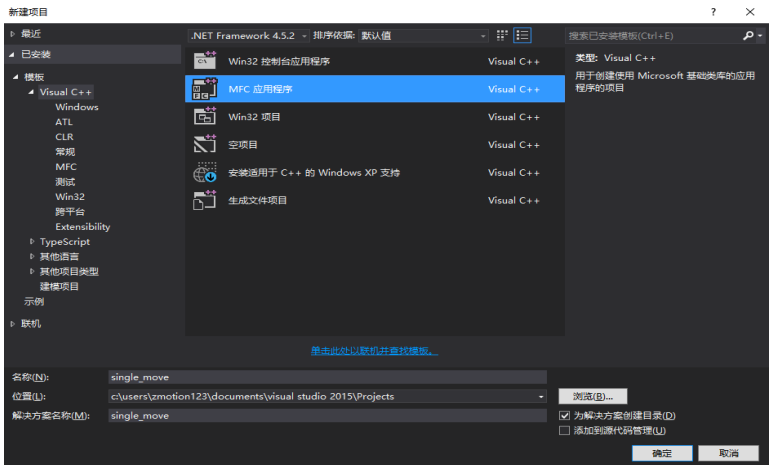
3	Select “Based on basic box”, click “next” or “finish”	
4	Find C++ function library provided by manufacturer. Routine is below (64-bit library)	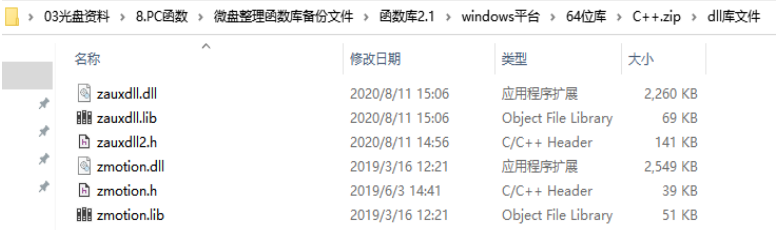
5	Copy all DLL related library files under the above path to the newly created project.	

6	Add a static library and related header files to the project. Static library: zauxdll.lib, zmotion.lib Related header files: zauxdll2.h, zmotion.h	1) Right-click the header file first, and then select: "Add" → "Existing Item".	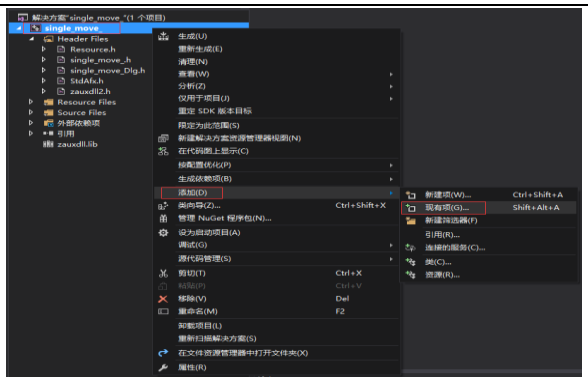
		2) Add static libraries and related header files in sequence in the pop-up window.	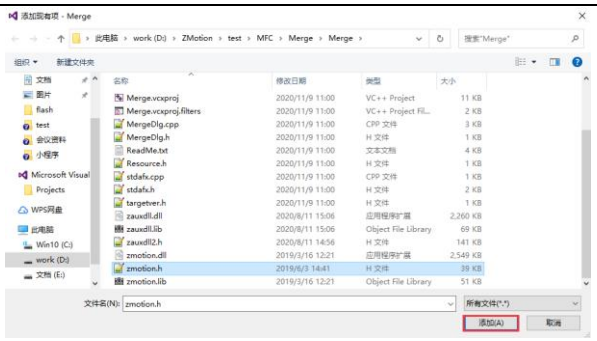
7	Declare the relevant header files and define the controller connection handle, so far the project is newly created.	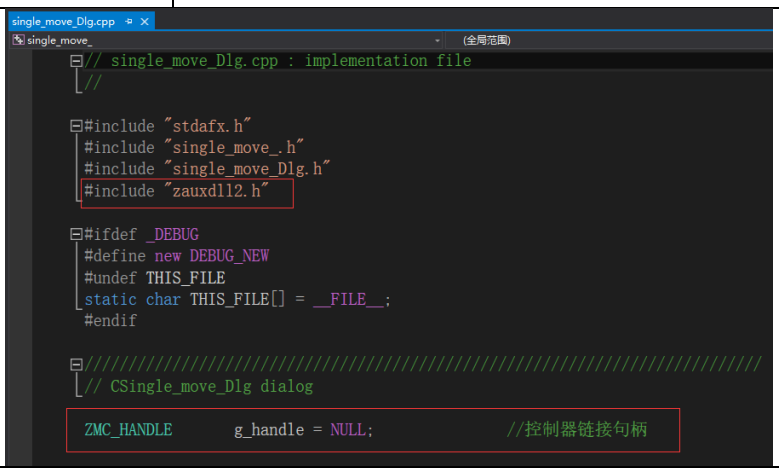	

```
// single_move_Dlg.cpp : implementation file
//

#include "stdafx.h"
#include "single_move_.h"
#include "single_move_Dlg.h"
#include "zauxdll2.h"

#ifdef _DEBUG
#define new DEBUG_NEW
#undef THIS_FILE
static char THIS_FILE[] = __FILE__;
#endif

/////////////////////////////////////////////////////////////////////////////
// CSingle_move_Dlg dialog

ZMC_HANDLE        g_handle = NULL;              //控制器链接句柄
```

Chapter VI Operation and Maintain

The correct operation and maintenance of the device can not only guarantee and extend the life cycle of the equipment itself, but also take technical management measures according to the pre-specified plan or the corresponding technical conditions to prevent equipment performance degradation or reduce the probability of equipment failure.

6.1. Regular Inspection and Maintenance

The working environment has an impact on the device. Therefore, it is usually inspected regularly based on the inspection cycle of 6 months to 1 year. The inspection cycle of the device can be appropriately adjusted according to the surrounding environment to make it work within the specified standard environment.

Check item	Check content	Inspection standards
power supply	Check whether the voltage is rated	DC 24V (-5%~5%)
surroundings	Whether the ambient temperature is within the specified range (when installed in the cabinet, the temperature inside the cabinet is the ambient temperature)	-10°C - 55°C
	Whether the ambient humidity is within the specified range (when installed in the cabinet, the humidity in the cabinet is the ambient humidity)	10%-95% non-condensing
	Is there direct sunlight	No
	With or without droplets of water, oil, chemicals, etc.	No
	Whether there is dust, salt, iron filings, dirt	No
	Whether there is corrosive gas	No
	Whether there are flammable and	No

	explosive gases or articles	
	Whether the device is subjected to vibration or shock	Should be within the range of vibration resistance and impact resistance
	Is the heat dissipation good	Keep good ventilation and heat dissipation
Installation and Wiring Status	Whether the basic unit and the expansion unit are installed firmly	The mounting screws should be tightened without loosening
	Whether the connecting cables of the basic unit and the expansion unit are fully inserted	The connection cable cannot be loosened
	Are the screws of the external wiring loose	Screws should be tightened without loosening
	Whether the cable is damaged, aged, cracked	The cable must not have any abnormal appearance

6.2. Common Problems & Solutions

Problems	Suggestions
Motor does not rotate.	1. Check whether the ATYPE of the controller is correct. 2. Check whether hardware position limit, software position limit, alarm signal work, and whether axis states are normal. 3. Check whether motor is enabled successfully. 4. Confirm whether pulse amount UNITS and speed values are suitable. If there is the encoder feedback, check whether MPOS changes. 5. Check whether pulse mode and pulse mode of drive are matched. 6. Check whether alarm is produced on motion controller station or drive station. 7. Check whether the wiring is correct. 8. Confirm whether controller sends pulses normally.

The position limit signal is invalid.	1. Check whether the limit sensor is working normally, and whether the "input" view can watch the signal change of the limit sensor. 2. Check whether the mapping of the limit switch is correct. 3. Check whether the limit sensor is connected to the common terminal of the controller.
No signal comes to the input.	1. Check whether the limit sensor is working normally, and whether the "input" view can watch the signal change of the limit sensor. 2. Check whether the mapping of the limit switch is correct. 3. Check whether the limit sensor is connected to the common terminal of the controller.
The output does not work.	1. Check whether IO power is needed. 2. Check whether the output number matches the ID of the IO board.
POWER led is ON, RUN led is OFF.	1. Check whether the power of the power supply is sufficient. At this time, it is best to supply power to the controller alone, and restart the controller after adjustment. 2. Check whether the ALM light flickers regularly (hardware problem).
RUN led is ON, ALM led is ON.	1. Program running error, please check RTSys error code, and check application program.
Fail to connect controller to PC through serial port.	1. Check whether the serial port parameters are modified by the running program, you can check all the current serial port configurations through ?*SETCOM. 2. Check whether the serial port parameters of the PC match the controller. 3. Open the device manager and check whether the serial driver of the PC is normal.
CAN expansion module cannot be connected.	1. Check the CAN wiring and power supply circuit, whether the 120 ohm resistor is installed at both

	ends. 2. Check the master-slave configuration, communication speed configuration, etc. 3. Check the DIP switch to see if there are multiple expansion modules with the same ID. 4. Use twisted-pair cables, ground the shielding layer, and use dual power supplies for severe interference (the main power supply of the expansion module and the IO power supply are separately powered)
Fail to connect controller to PC through net port.	1. Check IP address of PC, it needs to be at the same segment with controller IP address. 2. Check controller IP address, it can be checked and captured after connection through serial port. 3. When net port led is off, please check wiring. 4. Check whether controller power led POWER and running indicator led RUN are ON normally. 5. Check whether the cable is good quality, change one better cable to try again. 6. Check whether controller IP conflicts with other devices. 7. Check whether controller net port channel ETH are all occupied by other devices, disconnect to other devices, then try again. 8. When there are multiple net cards, don't use other net cards, or change one computer to connect again. 9. Check PC firewall setting. 10. Use “Packet Internet Groper” tool (Ping), check whether controller can be Ping, if it can't, please check physical interface or net cable. 11. Check IP address and MAC address through arp-a.